THE SPECIALIFT

S15

TECHNICAL SHEET

PERFORMANCE AND DIMENSIONS

Main features

This is the most compact geometric platform without outreach limiter in its class. It goes through a standard door and fit in the lifts, a key feature for use inside large structures such as airports or large shopping centres.

Max. working height	**14,9 m**
Max. reach with 230 kg	**6,9 m**
Platform height	**12,9 m**
Max. load in basket	**230 kg**
Basket dimensions	**1,4 x 0,7 x 1,1 m**
Basket rotation	**+/-90° (options)**
Turret rotation	**+/- 178°(356° non-continuous)**
Total weight	**1820 Kg**

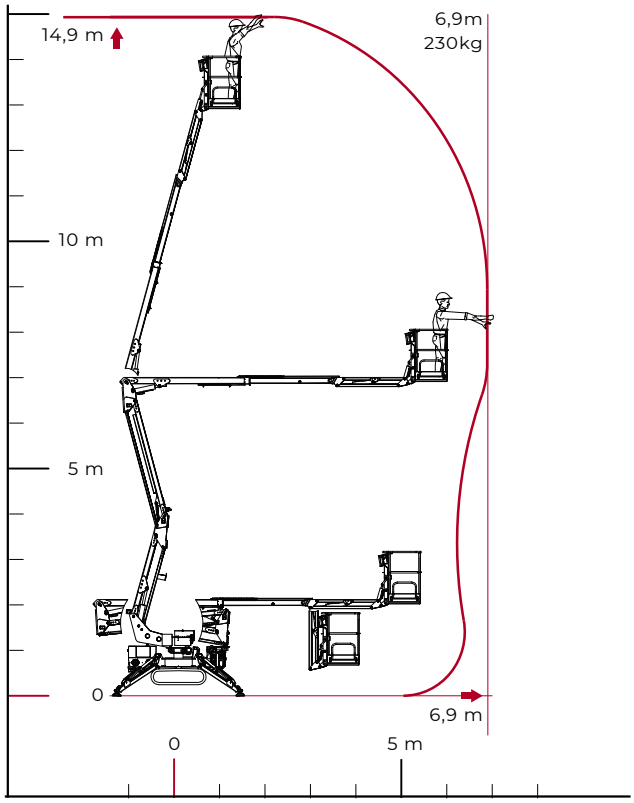

Via Bitritto, 119 - 70124 BARI - ITALY
Tel. +39 080 532 66 06 - Fax +39 080 536 85 41
www.cmclift.com - info@cmclift.com

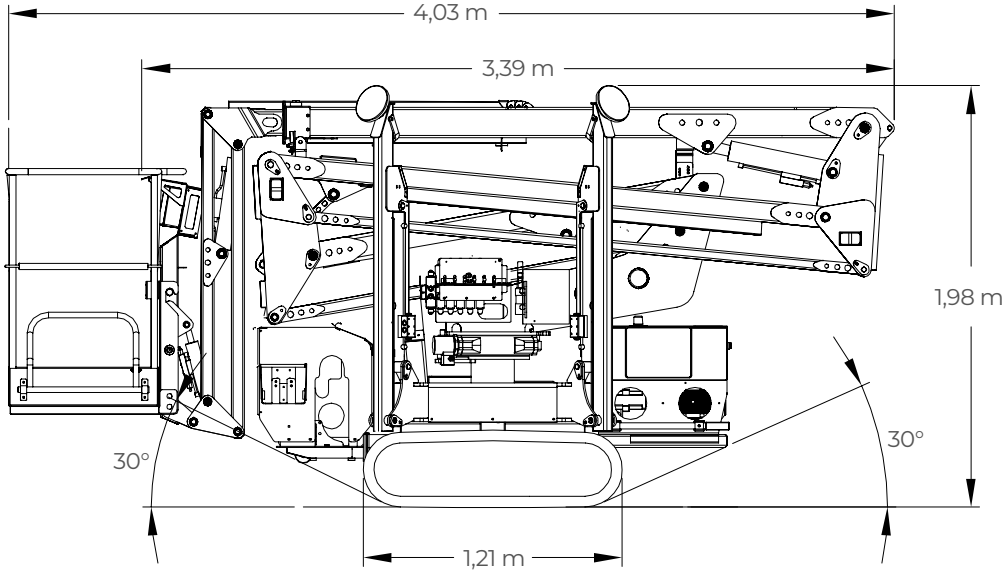
4,03 m
3,39 m
1,98 m
30°
30°
1,21 m

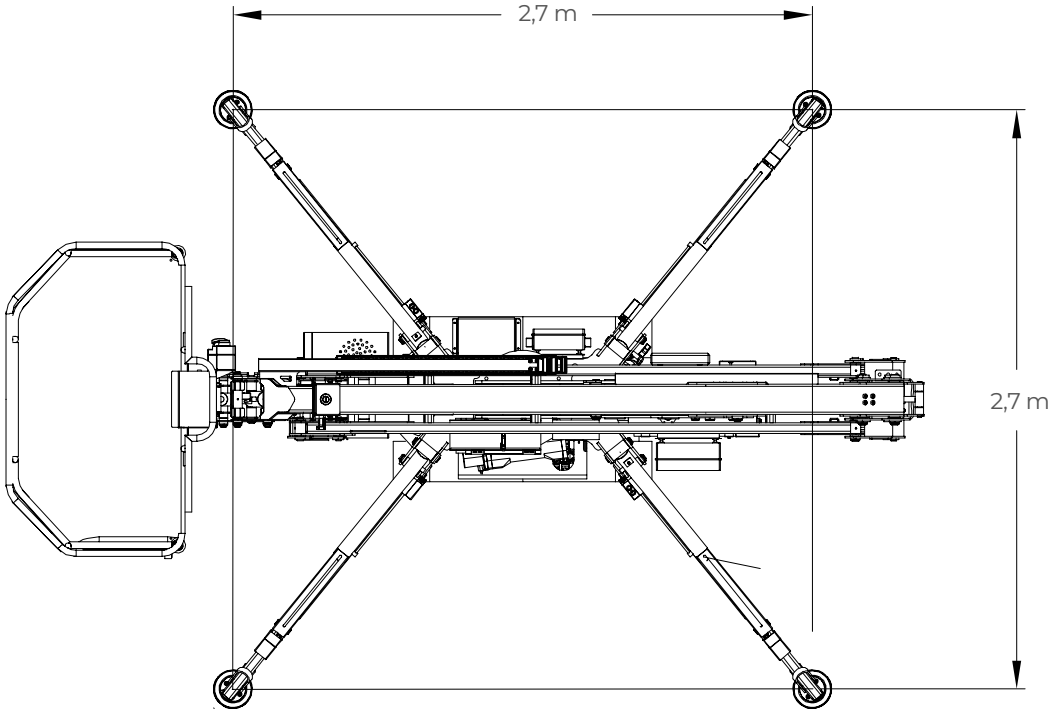
2,7 m
2,7 m

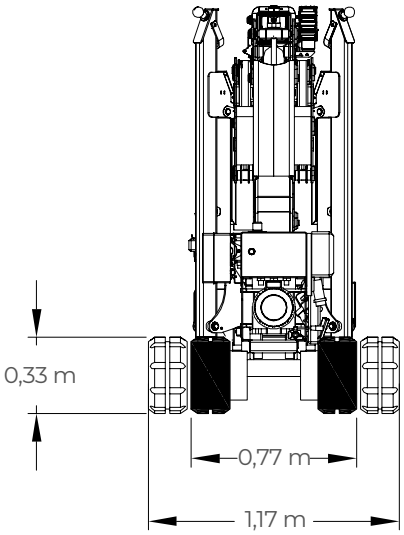
0,33 m
0,77 m
1,17 m

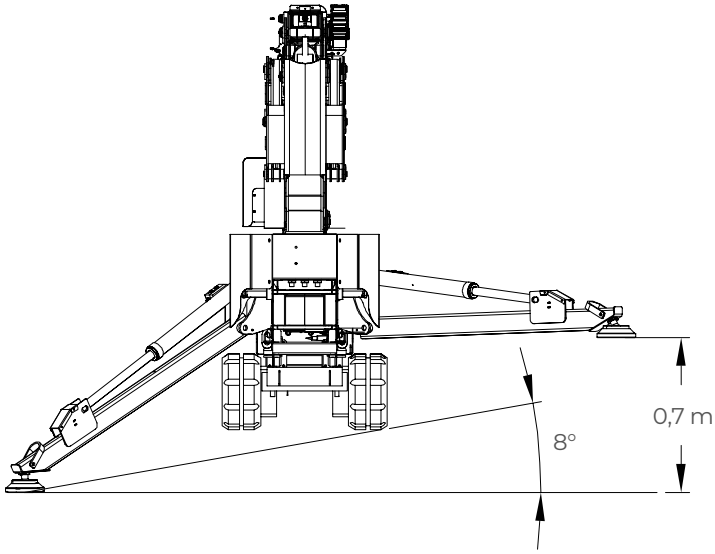
0,7 m
8°